PARTNERS CHOICE
HEATING & COOLING REPLACEMENT PARTS

REPLACEMENT PARTS LIST

Indoor Air Handler (B3, GB3) B Series

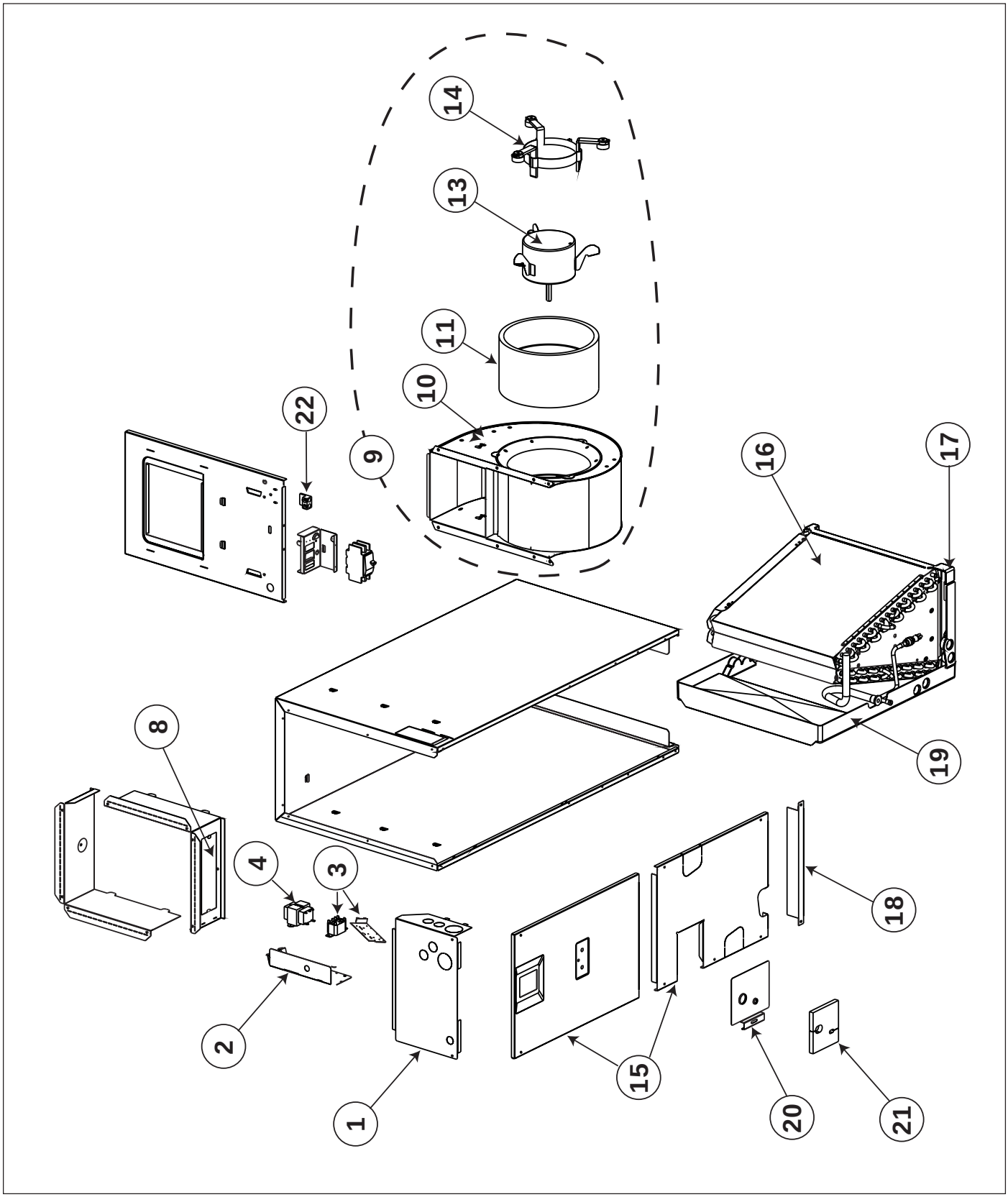

			B3 Multi-poise								B3 Vertical						Variable Speed				115V			EXPORT UNITS 50hz						EXPORT UNITS 60hz				GB3 Multi-poise								GB3 Vertical					
ITEM NO.	PART NO.	DESCRIPTION	024K-AB	030K-AB	030K-BB	036K-BB	042K-BB	048K-BB	060K-CB	066K-CB	024K-AB	030K-AB	036K-BB	042K-BB	048K-BB	060K-CB	036K-BB	048K-BB	060K-CB	066K-CB	024A-AB	036A-AB	048A-BB	1.5/2.0B	2.5/3.0B	3.0/3.5B	4.0B	5.0B	V-Speed 5.0B	1.5/2.0B	2.5/3.0B	4.0B	5.0B	024K-AB	030K-AB	030K-BB	036K-BB	042K-BB	048K-BB	060K-CB	066K-CB	024K-AB	030K-AB	036K-BB	042K-BB	048K-BB	060K-CB
1	389231	Top Cap Assembly (A)	1	1							1	1									1	1		1	1					1	1			1	1							1	1				
	389393	Top Cap Assembly (B)			1	1	1	1					1	1	1		1	1					1			1	1					1				1	1	1	1					1	1	1	
	389394	Top Cap Assembly (C)							1	1						1			1	1								1	1				1							1	1						1
2	275811	Electrical Panel																			1	1	1	1	1	1	1	1		1	1	1	1	1	1	1	1	1	1	1	1	1	1	1	1	1	1	1
	274501	Electrical Panel	1	1	1	1	1	1	1	1	1	1	1	1	1	1	1	1	1	1									1																		
3	621931	Blower Relay																			1	1	1	1	1	1	1	1		1	1	1	1	1	1	1	1	1	1	1	1	1	1	1	1	1	1	1
	903915	Control Board	1	1	1	1	1	1	1	1	1	1	1	1	1	1	1	1	1	1									1																		
4	621709	Transformer 230V / 24V, 40VA	1	1	1	1	1	1	1	1	1	1	1	1	1	1	1	1	1	1				1	1	1	1	1	1	1	1	1	1	1	1	1	1	1	1	1	1	1	1	1	1	1	1
	621807	Transformer 115V / 30V, 40VA																			1	1	1																								
5	624627	Variable Speed Board (not shown)															1	1	1	1									1																		
6	632261	Fuse, 3 Amp (not shown)	1	1	1	1	1	1	1	1	1	1	1	1	1	1	1	1	1	1	1	1	1	1	1	1	1	1	1	1	1	1	1	1	1	1	1	1	1	1	1	1	1	1	1	1	1
8	226420	Plate, Element Closeoff	1	1	2	2	2	2	2	2	1	1	2	2	2	2	2	2	2	2	1	1	2	1	1	2	2	2	2	1	1	2	2	1	1	2	2	2	2	2	1	1	2	2	2	2
9	903733	Blower Assy. 10x6, 1/5HP, 60	1								1																			1				1							1						
	903734	Blower Assy. 10x6, 1/3 HP, 60		1								1																			1				1							1					
	903735	Blower Assy. 10x8, 1/3 HP, 60			1	1	1						1	1																						1	1	1					1	1		
	903755	Blower Assy. 10x8, 1/2 HP, 60						1							1																	1						1							1	
	903736	Blower Assy. 10x10, 3/4 HP, 60							1	1						1																	1						1	1						1
	903737	Blower Assy. 10x6, 1/5 HP, 50																						1																						
	903738	Blower Assy. 10x6, 1/3 HP, 50																							1																					
	903739	Blower Assy. 10x8, 1/3 HP, 50																								1	1																			
	903740	Blower Assy. 10x10, 1/2 HP, 50																										1																		
	903741	Blower Assy. 10x6, 1/3 HP, 60, 115V																			1	1																									
	903742	Blower Assy. 10x8, 1/2 HP, 60, 115V																					1																								
	903764B	Blower Assy. 10x8, 1/2 HP, 60, Var. Spd.															1	1																													
	903765B	Blower Assy. 11x10, 3/4 HP, 60, Var. Spd.																	1	1																											
	903918	Blower Assy. 11x10, 3/4 HP, 50, Var. Spd.																											1																		
10	497207	Blower Housing 10x6	1	1							1	1									1	1		1	1					1	1			1	1							1	1				
	497206	Blower Housing 10x8			1	1	1	1					1	1	1								1			1	1					1				1	1	1	1					1	1	1	
	497205	Blower Housing 10x10							1	1						1												1					1							1	1						1
	497200	Blower Housing 11x8															1	1																													
	497202	Blower Housing 11x10																	1	1									1																		
11	667251	Blower Wheel 10 X 6	1	1							1	1									1	1		1	1					1	1			1	1							1	1				
	667037	Blower Wheel 10 X 8			1	1	1	1					1	1	1								1			1	1					1				1	1	1	1					1	1	1	
	667271	Blower Wheel 10 X 10							1	1						1											1	1				1							1	1						1
	667258	Blower Wheel 11 X 8															1	1																													
	667277	Blower Wheel 11 X 10																	1	1									1																		
12	621434	Capacitor 7.5UF, 370V (not shown)	1								1													1						1				1							1						
	621435	Capacitor 10UF, 370V (not shown)		1	1	1	1					1	1	1											1	1					1				1	1	1	1					1	1	1	
	621499	Capacitor 15UF, 370V (not shown)						1							1						1	1					1					1						1							1	
	621889	Capacitor 15UF, 440V (not shown)																										1																		
	621171	Capacitor 20UF, 370V (not shown)							1	1						1							1										1							1	1						1
13	621829	Motor, 1/5HP,230V,60, 3SPD	1								1																			1				1							1						
	621830	Motor, 1/3HP,230V,60, 3SPD		1	1	1	1					1	1	1																	1				1	1	1	1					1	1	1	
	621831	Motor, 1/2HP,230V,60, 3SPD						1							1																	1						1							1	
	621891	Motor, 3/4HP,230V,60, 3SPD							1	1						1																	1							1	1						1
	621845	Motor, 1/5HP,230V,50, 3SPD																						1																							
	621846	Motor, 1/3HP,230V,50, 3SPD																							1	1	1																				
	903958	Motor, 1/2HP,230V,50, 3SPD																										1																			
	621874	Motor, 1/3HP,115V,60, 3SPD																			1	1																									
	621875	Motor, 1/2HP,115V,60, 3SPD																					1																								
	621927	Motor, 1/2HP,230V,60, VARIABLE SPD															1	1																													
	621928	Motor, 3/4HP,230V,60,VARIABLE SPD																	1	1																											
	622030	Motor, 3/4HP,230V,50, VARIABLE SPD																											1																		
14	903489	Motor Mount, 13"															1	1	1	1									1																		
	913871	Motor Mount, 11"							1	1						1												1												1	1						1
15	903723	Doors, A-Cabinet, Grey (Brown - 903726)	1	1							1	1									1	1		1	1					1	1			1	1							1	1				
	903724	Doors, B-Cabinet, Grey (Brown - 903727)			1	1	1	1					1	1	1		1	1					1			1	1					1				1	1	1	1					1	1	1	
	903725	Doors, C-Cabinet, Grey (Brown - 903728)							1										1									1	1				1							1							1
	903913	Doors, C-Cabinet Tall, Grey								1													1																		1						
16	917143A	Coil Assembly 024A	1								1										1			1						1				1								1					
	917083A	Coil Assembly 030/036A		1								1										1			1						1				1								1				
	*917209A	Coil Assembly 036B			1																															1											
	**917210A	Coil Assembly 042B				1							1				1																				1						1				
	917210A	Coil Assembly 042B					1							1												1											1							1			
	917211A	Coil Assembly 048B						1							1			1					1				1					1						1							1	
	917408	Coil Assembly 060C							1							1			1									1	1				1							1							1
	917125	Coil Assembly 066C								1										1																					1						
17	669357	Drain Pan (A)	1	1							1	1									1	1		1	1					1	1			1	1							1	1				
	669358	Drain Pan (B)			1	1	1	1					1	1	1		1	1					1			1	1					1				1	1	1	1					1	1	1	
	669359	Drain Pan (C)							1	1						1			1	1								1	1				1							1	1						1
18	D08764	Filter Cover (A) - Grey (Galv. - D08761)	1	1							1	1									1	1		1	1					1	1			1	1							1	1				
	D08765	Filter Cover (B) - Grey (Galv. - D08762)			1	1	1	1					1	1	1		1	1					1			1	1					1				1	1	1	1					1	1	1	
	D08766	Filter Cover (C) - Grey (Galv. - D08763)							1	1						1			1	1								1	1				1							1	1						1
19	669299	Horizontal Drain Pan Assembly	1	1	1	1	1	1	1								1	1	1		1	1	1	1	1	1	1	1	1	1	1	1	1	1	1	1	1	1	1	1							
	669115	Horizontal Drain Pan Assembly								1										1																					1						
20	273451	Close Off	1	1	1	1	1	1	1	1	1	1	1	1	1	1	1	1	1	1	1	1	1	1	1	1	1	1	1	1	1	1	1	1	1	1	1	1	1	1	1	1	1	1	1	1	1
21	689603	Gasket, Tube Close Off	1	1	1	1	1	1	1	1	1	1	1	1	1	1	1	1	1	1	1	1	1	1	1	1	1	1	1	1	1	1	1	1	1	1	1	1	1	1	1	1	1	1	1	1	1
22	632235	Grounding Lug	1	1	1	1	1	1	1	1	1	1	1	1	1	1	1	1	1	1	1	1	1	1	1	1	1	1	1	1	1	1	1	1	1	1	1	1	1	1	1	1	1	1	1	1	1
23	669100	Coil Support Rod (not shown)	1	1	1	1	1	1	1	1							1	1	1	1	1	1	1	1	1	1	1	1	1	1	1	1	1	1	1	1	1	1	1	1							
24	634632	Motor Harness (not shown)															1	1	1	1									1																		
25	266781	3-Wire Motor Harness (not shown)															1	1	1	1									1																		
26	634646	Low Voltage Harness (not shown)															1	1	1	1									1																		

* Restrictor change required to .063

** Restrictor change required to .067